Journal of Algebraic Combinatorics **11** (2000), 135–154

Minimal Resolutions and the Homology of Matching and Chessboard Complexes

VICTOR REINER reiner@math.umn.edu
JOEL ROBERTS roberts@math.umn.edu
Department of Mathematics, University of Minnesota, Minneapolis, MN 55455, USA

Received April 24, 1998; Revised October 20, 1998

Abstract. We generalize work of Lascoux and Józefiak-Pragacz-Weyman on Betti numbers for minimal free resolutions of ideals generated by 2×2 minors of generic matrices and generic symmetric matrices, respectively. Quotients of polynomial rings by these ideals are the classical Segre and quadratic Veronese subalgebras, and we compute the analogous Betti numbers for some natural modules over these Segre and quadratic Veronese subalgebras. Our motivation is two-fold:

- We immediately deduce from these results the irreducible decomposition for the symmetric group action on the rational homology of all *chessboard complexes* and complete graph *matching complexes* as studied by Björner, Lovasz, Vrećica and Živaljević. This follows from an old observation on Betti numbers of semigroup modules over semigroup rings described in terms of simplicial complexes.
- The class of modules over the Segre rings and quadratic Veronese rings which we consider is closed under the operation of taking *canonical modules*, and hence exposes a pleasant symmetry inherent in these Betti numbers.

Keywords: minimal free resolution, matching complex, chessboard complex, determinantal ideal

1. Introduction and main results

Hilbert's Syzygy theorem says that every finitely generated module M over a polynomial ring $A = k[x_1, \ldots, x_n]$ has a finite resolution by free A-modules, i.e. an exact sequence

$$0 \to A^{\beta_h} \to \cdots \to A^{\beta_1} \to A^{\beta_0} \to M \to 0. \tag{1.1}$$

In the case where each β_i is as small as possible, this is called a *minimal free resolution*, and the numbers β_i are called the *Betti numbers* of M over A. If M is a graded module over A it is known that $\beta_i = \dim_k \operatorname{Tor}_i^A(M, k)$, where k is regarded as the trivial A-module $k = A/(x_1, \ldots, x_n)$.

In a seminal work, Lascoux [19] computed $\operatorname{Tor}_\bullet^A(M, k)$ in the case where $A = k[z_{ij}]$ is the polynomial ring in the entries of a generic $m \times n$ matrix (z_{ij}), k is a field of characteristic zero, and M is the quotient ring A/I where I is the ideal generated by all $t \times t$ minors of the matrix (z_{ij}). In this situation, there is an action of $GL_m(k) \times GL_n(k)$ on $\operatorname{Tor}_\bullet^A(M, k)$ which is crucial for Lascoux's analysis, and his result actually describes the decomposition of $\operatorname{Tor}_\bullet^A(M, k)$ into $GL_m(k) \times GL_n(k)$-irreducibles. Józefiak, Pragacz, and Weyman [17]

used similar methods to compute $\mathrm{Tor}_\bullet^A(M,k)$ where A is the polynomial ring $k[z_{ij}]$ in the entries of a generic $n \times n$ *symmetric* matrix ($z_{ij} = z_{ji}$), I is the ideal generated by all $t \times t$ minors, and M is the quotient A/I (again k has characteristic zero). Their results also rely heavily on the inherent $GL_n(k)$-action, and describe the irreducible $GL_n(k)$-decomposition of $\mathrm{Tor}_\bullet^A(M,k)$.

The main results of this paper will generalize the results for 2×2 minors from [17, 19], as we now explain. Let $k[\mathbf{x},\mathbf{y}] := k[x_1,\ldots,x_m,y_1,\ldots,y_n]$ be a polynomial ring in two sets of variables of sizes m,n respectively. The *Segre subalgebra* $\mathrm{Segre}(m,n,0)$ is the subalgebra generated by all monomials $x_i y_j$ with $1 \le i \le m$ and $1 \le j \le n$. Letting $A_{m,n}$ be the polynomial ring $k[z_{ij}]$ in the entries of a generic $m \times n$ matrix (z_{ij}) as above, there is a surjection

$$\begin{aligned} \phi : A_{m,n} &\to \mathrm{Segre}(m,n,0) \\ z_{ij} &\mapsto x_i y_j \end{aligned}$$

The kernel of this surjection is well-known to be the ideal $I_{m,n}$ generated by the 2×2 minors of the matrix (z_{ij}), and hence $\mathrm{Segre}(m,n,0) \cong A_{m,n}/I_{m,n}$. Identifying $x_1,\ldots,x_m$ and $y_1,\ldots,y_n$ with the bases of two k-vector spaces $V \cong k^m$ and $W \cong k^n$, then $k[\mathbf{x},\mathbf{y}]$ may be viewed as the symmetric algebra

$$\mathrm{Sym}(V \oplus W) = \bigoplus_{a,b \ge 0} \mathrm{Sym}^a V \otimes \mathrm{Sym}^b W.$$

If we define

$$\mathrm{Segre}(m,n,r) = \bigoplus_{a,b \ge 0, a=b+r} \mathrm{Sym}^a V \otimes \mathrm{Sym}^b W$$

for any integer r, then it is easy to check that $\mathrm{Segre}(m,n,0)$ agrees with our earlier definition, and in general $\mathrm{Segre}(m,n,r)$ is a finitely-generated module over $\mathrm{Segre}(m,n,0)$. Therefore the surjection ϕ endows $\mathrm{Segre}(m,n,r)$ with the structure of a finitely-generated $A_{m,n}$-module. Furthermore, if we identify z_{ij} with $x_i \otimes y_j$, then $A_{m,n} \cong \mathrm{Sym}(V \otimes W)$. As a consequence, the product of general linear groups $GL(V) \times GL(W) \cong GL_m(k) \times GL_n(k)$ acts compatibly on $A_{m,n}$ and $\mathrm{Segre}(m,n,r)$ and hence also acts on $\mathrm{Tor}_\bullet^{A_{m,n}}(\mathrm{Segre}(m,n,r),k)$. The results of [19] for 2×2 minors therefore describe the irreducible decomposition of $\mathrm{Tor}_\bullet^{A_{m,n}}(\mathrm{Segre}(m,n,0),k)$ when k has characteristic zero, and our first main result generalizes this to $\mathrm{Segre}(m,n,r)$. Recall that the irreducible polynomial representations V^λ of $GL_n(k) = GL(V)$ are indexed by partitions $\lambda = (\lambda_1 \ge \lambda_2 \ge \cdots \ge \lambda_n \ge 0)$, and $|\lambda| := \sum_i \lambda_i$. Similarly, we denote by W^μ the irreducible representation of $GL_m(k) \cong GL(W)$ indexed by the partition μ. The representation V^λ corresponds to a Ferrers shape in which $\lambda_1,\ldots,\lambda_n$ are the row lengths.

Theorem 1.1 *For fields k of characteristic zero and all $r \in \mathbb{Z}$, as a $GL_m(k) \times GL_n(k)$-representation, $\mathrm{Tor}_\bullet^{A_{m,n}}(\mathrm{Segre}(m,n,r),k)$ is the direct sum of irreducible representations $V^\lambda \otimes W^\mu$ where (λ,μ) runs through all pairs of partitions pictured in figure* 1, *with*

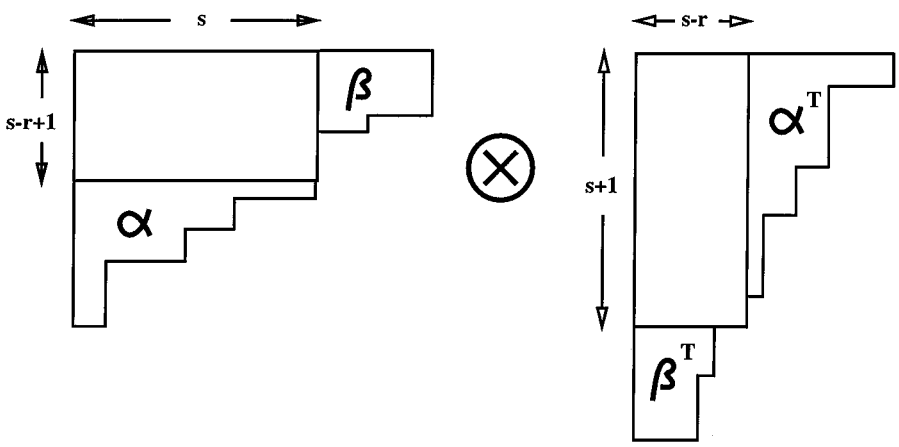

Figure 1. The pairs of partitions (λ, μ) indexing $V^\lambda \otimes W^\mu$ which occur in $\mathrm{Tor}_\bullet^{A_{m,n}}(\mathrm{Segre}(m, n, r), k)$.

- *s arbitrary,*
- λ, μ *having at most m, n parts respectively,*

and with the pair (λ, μ) *occurring in homological degree* $s(s-r) + |\alpha| + |\beta|$, *i.e. in* $\mathrm{Tor}^{A_{m,n}}_{s(s-r)+|\alpha|+|\beta|}(\mathrm{Segre}(m, n, 0), k)$. *Here* α, β *are as shown in the figure, and* α^T, β^T *represent their conjugate partitions.*

Similarly, if we let $k[\mathbf{x}] := k[x_1, \ldots, x_n]$ then the dth *Veronese subalgebra* $\mathrm{Veronese}(n, d, 0)$ is the subalgebra of $k[\mathbf{x}]$ generated by all monomials of degree d. Letting A_n be the polynomial ring $k[z_{ij}]$ in the entries of a generic symmetric $n \times n$ matrix (z_{ij}) (so $z_{ij} = z_{ji}$) as above, there is a surjection

$$\begin{aligned} \phi : A_n &\to \mathrm{Veronese}(n, 2, 0) \\ z_{ij} &\mapsto x_i x_j \end{aligned}$$

The kernel of this surjection is well-known to be the ideal I_n generated by the 2×2 minors of the symmetric matrix (z_{ij}), and hence $\mathrm{Veronese}(n, 2, 0) \cong A_n / I_n$. If we identify $x_1, \ldots, x_n$ with the basis of the k-vector space $V \cong k^n$, then $k[\mathbf{x}]$ may be viewed as the symmetric algebra

$$\mathrm{Sym} V = \bigoplus_{a \geq 0} \mathrm{Sym}^a V.$$

Defining

$$\mathrm{Veronese}(n, d, r) := \bigoplus_{a \equiv r \bmod d} \mathrm{Sym}^a V$$

for any $r \in \mathbb{Z}/d\mathbb{Z}$, it is easy to check that $\mathrm{Veronese}(n, d, 0)$ agrees with our earlier definition, and in general $\mathrm{Veronese}(n, d, r)$ is a finitely-generated module over $\mathrm{Veronese}(n, d, 0)$.

Therefore the surjection ϕ endows Veronese$(n, 2, r)$ for $r \equiv 0, 1 \bmod 2$ with the structure of a finitely-generated A_n-module. Furthermore, $A_n \cong \mathrm{Sym}(\mathrm{Sym}^2 V)$ so that $GL(V) \cong GL_n(k)$ acts compatibly on A_n and Veronese$(n, 2, r)$, and hence also acts on $\mathrm{Tor}_\bullet^{A_n}(\mathrm{Veronese}(n, 2, r), k)$. The results of [17] for 2×2 minors describe the irreducible decomposition of $\mathrm{Tor}_\bullet^{A_n}(\mathrm{Veronese}(n, 2, 0), k)$ when k has characteristic zero, and our second main result generalizes this to Veronese$(n, 2, r)$.

Theorem 1.2 *For fields k of characteristic zero, and for $r \equiv 0, 1 \bmod 2$, as a $GL(V)$-representation,* $\mathrm{Tor}_\bullet^{A_n}(\mathrm{Veronese}(n, 2, r), k)$ *is the direct sum of irreducible $GL(V)$-representations V^λ where λ runs through all self-conjugate partitions λ, as shown in figure* 2, *with*

- $r \equiv |\lambda| \bmod 2$,
- λ *having at most n parts,*

and with V^λ occurring in homological degree $\binom{s}{2} + |\alpha|$ (i.e. in $\mathrm{Tor}^{A_n}_{\binom{s}{2}+|\alpha|}(\mathrm{Veronese}(n, 2, r), k)$*). Here s is the size of the Durfee square of λ, and α is as shown in figure* 2.

Our original motivation for performing these computations comes from an old observation (Proposition 3.1) that has been re-discovered many times (see e.g. [24, Theorem 7.9], [7, Proposition 1.1], [8]). The observation says that in the case where M is a finitely generated semigroup module over an affine semigroup ring S, and A is the polynomial ring in the generators of S, the groups $\mathrm{Tor}_\bullet^A(M, k)$ are isomorphic to direct sums of homology groups with coefficients in k for certain simplicial complexes derived from S, M. As will be shown in Section 3 (and was alluded to briefly in [7]), this result applies to both Segre(m, n, r) and Veronese$(n, 2, r)$. Furthermore, the relevant simplicial complexes include as special cases the *$m \times n$ chessboard complexes* $\Delta_{m,n}$ and the *matching complex* Δ_n for the complete graph

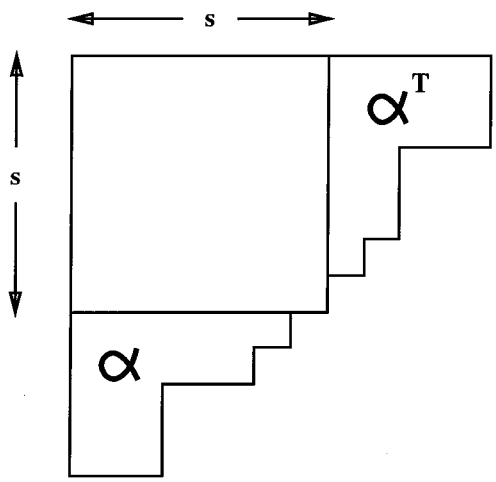

Figure 2. The self-conjugate partitions λ indexing V^λ which occur in $\mathrm{Tor}_\bullet^{A_{m,n}}(\mathrm{Veronese}(n, 2, r), k)$ for $r = 0, 1$.

on n-vertices, as defined and studied in [5]. Our computations of Tor allow us to compute the rational homology (Theorem 3.3) for all *chessboard complexes with multiplicities*, as defined in [7, Remark 3.5], and for the class of complexes generalizing the matching complexes Δ_n which we call *bounded-degree graph complexes*. As special cases, we deduce the following result about the complexes $\Delta_{m,n}$ and Δ_n. For its statement, recall that the irreducible representations $\mathcal{S}^\lambda$ of the symmetric group Σ_n are indexed by partitions λ with $|\lambda| = n$.

Theorem 1.3 *For fields k of characteristic zero, as a $\Sigma_m \times \Sigma_n$-representation, the reduced homology $\tilde{H}_\bullet(\Delta_{m,n}; k)$ is the direct sum of irreducible representations $\mathcal{S}^\lambda \otimes \mathcal{S}^\mu$ where (λ, μ) runs through all pairs of partitions pictured in figure* 1 *with*

- *s arbitrary,*
- $|\lambda| = m$, $|\mu| = n$ *(so that* $r = m - n$*),*

and with the pair (λ, μ) occurring in $\tilde{H}_{s(s-r)+|\alpha|+|\beta|}(\Delta_{m,n}; k)$. Here α, β are as shown in figure 1.

Also for fields k of characteristic zero, as a Σ_n-representation, the reduced homology $\tilde{H}_\bullet(\Delta_n; k)$ for $r = 0, 1$ is the direct sum of irreducible representations $\mathcal{S}^\lambda$ where λ runs through all self-conjugate partitions λ, as shown in figure 1, *with*

- $|\lambda| = n$,
- $|\lambda| \equiv r \bmod 2$,

and with $\mathcal{S}^\lambda$ occurring in $\tilde{H}_{\binom{s}{2}+|\alpha|-1}(\Delta_n; k)$. Here s is the size of the Durfee square of λ, and α as shown in the figure.

We should point out that although we were not originally aware of it, the results in Theorem 1.3 are not new. In a recent preprint [11], Friedman and Hanlon obtain exactly the same description as in Theorem 1.3 for the rational homology of the chessboard complex $\Delta_{m,n}$, using a beautiful, but entirely different method involving the spectral decomposition of *discrete Laplacians* on $\Delta_{m,n}$. Their method uncovers further information about the irreducible decompositions of eigenspaces for these Laplacians. Also, the same description as in Theorem 1.3 for the rational homology of the matching complex Δ_n was obtained independently by Bouc [6], and also independently by Karagueusian [18].

There is another recent motivation for the computation of the rational homology of the complete graph matching complex Δ_n, ensuing from work of Vassiliev, which is discussed in [4]. In particular, Table 3 of that reference lists homology calculations of $\tilde{H}_i(\Delta_{m,n}; k)$ for small values of i, char(k) and Theorem 1.3 (or the results of [6, 18]) accurately predict all of the non-torsion data which occurs in this table.

The paper is structured as follows. Section 2 discusses the canonical modules of Segre(m, n, r) and Veronese$(n, 2, r)$, and explains how Theorems 1.1 and 1.2 respect canonical module duality. It then uses this duality to prove Theorems 1.1 and 1.2. Section 3 sketches the proof of the old observation on Betti numbers of semigroup modules over semigroup rings needed to deduce Theorem 1.3. This section also gives the result (Theorem 3.3) generalizing Theorem 1.3, about rational homology of chessboard complexes with multiplicities and bounded-degree graph complexes. Section 4 is devoted to remarks and open problems.

2. Canonical modules and the proof of Theorems 1.1, 1.2

The goal of this section is two-fold. First we review the definition of Cohen-Macaulayness and canonical modules. A general reference for some of this material is [24]. Then we determine when Segre(m, n, r) and Veronese(n, d, r) are Cohen-Macaulay and identify their canonical modules. We then explain how Theorems 1.1 and 1.2 respect canonical module duality and show how this implies the theorems.

Recall that for a finitely generated graded module M over the polynomial ring $A = k[x_1, \ldots, x_n]$, the *homological dimension* $h = \mathrm{hd}_A(M)$ is the length of a minimal free resolution for M, i.e. it is the largest index h such that $\mathrm{Tor}_h^A(M, k) \neq 0$. If we denote by d the *Krull dimension* of the quotient $A/\mathrm{Ann}_A M$, then A is said to be *Cohen-Macaulay* if $\mathrm{hd}_A(M) = n - d$. If M is a module over a finitely generated graded k-algebra R which is not a polynomial ring, then one usually takes A to be a polynomial ring in indeterminates which map to a minimal set of algebra generators for R, and say that M is a Cohen-Macaulay R-module if it is Cohen-Macaulay as an A-module.

When M is Cohen-Macaulay, the groups $\mathrm{Ext}_A^i(M, A)$ are known to vanish for $i < h$, and the *canonical module* $\Omega(M)$ is defined to be the A-module $\mathrm{Ext}_A^h(M, A)$. Because of the vanishing of the lower Ext groups, applying the functor $\mathrm{Hom}_A(\cdot, A)$ to the minimal free resolution (1.1) gives an exact sequence (and hence a minimal free resolution)

$$0 \leftarrow \Omega(M) \leftarrow (A^*)^{\beta_h} \leftarrow \cdots \leftarrow (A^*)^{\beta_1} \leftarrow (A^*)^{\beta_0} \leftarrow 0$$

of $\Omega(M)$. We conclude from this resolution that $\mathrm{Tor}_i^A(M, k)$ and $\mathrm{Tor}_{h-i}^A(\Omega(M), k)$ are dual as k-vector spaces for all i.

Proposition 2.1 *For an arbitrary field k,* Segre(m, n, r) *is a Cohen-Macaulay $A_{m,n}$-module if and only if either*
- $0 \leq r \leq n - 1$, *or*
- $0 \leq -r \leq m - 1$, *or*
- $m = n = 1$ *and r is arbitrary.*

Proof: We observe that Segre(m, n, r) is the k-linear span of monomials $\mathbf{x}^{\beta'}\mathbf{y}^{\beta''}$ such that $\sum_{i=1}^m \beta_i' - \sum_{j=1}^n \beta_j'' = r$. The depth and Cohen-Macaulayness of such modules constructed from solutions of linear Diophantine equations were studied by Stanley [23]. In particular, his Corollary 3.4 (with $s = m, t = n, \alpha = r$ and $a_i = b_j = 1$ for all i, j) exactly gives the proposition. □

We must also address the Cohen-Macaulayness of the modules Veronese(n, d, r), and furthermore identify the canonical modules of Segre(n, d, r) and Veronese(n, d, r). A convenient approach is to use some facts from the invariant theory of finite (or compact) groups which we now review (see [22] for a nice survey).

Recall that if G is any subgroup of $GL(V) \cong GL_n(k)$, then identifying $R = k[x_1, \ldots, x_n]$ with $\mathrm{Sym}(V)$ defines a G-action on R. For the remainder of this section, assume that $k = \mathbb{C}$, and we will assume that G is a compact subgroup of $GL_n(\mathbb{C})$. When G is compact, the subring R^G of G-invariant polynomials is finitely generated and Cohen-Macaulay

by the methods of Hochster and Eagon [16]. More generally, for any irreducible character χ of G, one can define the module of *χ-relative invariants* $R^{G,\chi}$ to be the *χ-isotypic* component of R. It is shown in [22, Theorem 3.10] that for G *finite*, $R^{G,\chi}$ is a finitely generated Cohen-Macaulay module over R^G, (although Proposition 2.1 shows that Cohen-Macaulayness can fail for compact groups G and non-trivial characters χ). One can furthermore identify the canonical module $\Omega(R^{G,\chi})$ in the cases where $R^{G,\chi}$ is Cohen-Macaulay.

Lemma 2.2 [22, *Remark on p.* 502] *Let $G \subset GL_n(\mathbb{C})$ be compact, χ an irreducible character of G, det the determinant character of G, and $\bar{\chi}$ the conjugate character to χ, i.e. $\bar{\chi}(g) = \overline{\chi(g)}$. Assume $R^{G,\chi}$ is a Cohen-Macaulay R^G-module. Then we have the following isomorphism of graded R^G-modules*

$$\Omega(R^{G,\chi}) \cong R^{G,\overline{\chi \cdot det}}$$

up to an overall shift in grading.

We now apply these facts to $\mathrm{Segre}(m,n,r)$, $\mathrm{Veronese}(n,d,r)$. Let $\mathbb{S}^1$ be the *circle group*

$$\mathbb{S}^1 = \{e^{i\theta}\}_{\theta \in \mathbb{R}/2\pi\mathbb{Z}}$$

embedded as a subgroup $G \hookrightarrow GL(V \oplus W) \cong GL_{n+m}(\mathbb{C})$ as follows:

$$e^{i\theta} \mapsto \begin{pmatrix} e^{i\theta} \cdot I_V & 0 \\ 0 & e^{-i\theta} \cdot I_W \end{pmatrix}.$$

Here I_V, I_W denote the identity matrices acting on V, W respectively. If we let $R = \mathrm{Sym}^{\cdot}(V \oplus W)$ and let χ_r denote the character $\chi(e^{i\theta}) = e^{ri\theta}$ of G, then it is clear that $\mathrm{Segre}(m,n,0)$ is the invariant subring R^G, and $\mathrm{Segre}(m,n,r)$ is the module of relative invariants R^{G,χ_r}.

Similarly, embed the cyclic group $\mathbb{Z}/d\mathbb{Z}$ as a subgroup $G \subseteq GL(V) \cong GL_n(\mathbb{C})$ as follows:

$$\zeta \mapsto e^{\frac{2\pi i}{d}} \cdot I_V$$

where ζ is a generator of $\mathbb{Z}/d\mathbb{Z}$. If we let $R = \mathrm{Sym}(V)$ and let χ_r be the character $\chi(\zeta) = e^{\frac{2\pi i r}{d}}$ of G, then it is clear that $\mathrm{Veronese}(n,d,0)$ is the invariant subring R^G, and $\mathrm{Veronese}(n,d,r)$ is the module of relative invariants R^{G,χ_r}.

Corollary 2.3 *When $k = \mathbb{C}$, the* $\mathrm{Veronese}(n,d,0)$*-modules* $\mathrm{Veronese}(n,d,r)$ *are always Cohen-Macaulay. Furthermore, when $k = \mathbb{C}$ and whenever the modules* $\mathrm{Segre}(m,n,r)$, $\mathrm{Veronese}(n,d,r)$ *are Cohen-Macaulay, their canonical modules are described, up to a shift in grading, as follows*:

$$\Omega(\mathrm{Segre}(m,n,r)) \cong \mathrm{Segre}(m,n,n-m-r)$$
$$\Omega(\mathrm{Veronese}(n,d,r)) \cong \mathrm{Veronese}(n,d,-n-r)$$

Proof: As noted above, $\mathrm{Veronese}(n, d, r)$ is a module of relative invariants for a finite group, and hence is Cohen-Macaulay by [22, Theorem 3.10]. Then Lemma 2.2 and our previous discussion identifies the canonical modules. □

As a consequence, the duality between the opposite Tor groups for $\Omega(M)$ and M manifests itself in a combinatorial/representation theoretic duality inherent in Theorems 1.1 and 1.2. The next result is the combinatorial manifestation of that duality.

Proposition 2.4 *For $0 \le r \le n-1$ or $0 \le -r \le m-1$, consider the operation of complementing the shapes (λ, μ) within the rectangular shapes $((n-1)^m, (m-1)^n)$ and then rotating both shapes 180 degrees. This operation gives an involution which pairs the shapes predicted by Theorem 1.1 to occur in*

$$\mathrm{Tor}_i^{A_{m,n}}(\mathrm{Segre}(m, n, r), \mathbb{C})$$

with those predicted to occur in

$$\mathrm{Tor}_j^{A_{m,n}}(\mathrm{Segre}(m, n, n-m-r), \mathbb{C})$$

where $i + j = (m-1)(n-1)$.

For $r \equiv 0, 1 \bmod 2$, consider the operation of complementing the self-conjugate shape λ within the square shape n^n, and then rotating 180 degrees. This operation gives an involution which pairs the shapes predicted by Theorem 1.2 to occur in

$$\mathrm{Tor}_i^{A_n}(\mathrm{Veronese}(n, 2, r), \mathbb{C})$$

with those predicted to occur in

$$\mathrm{Tor}_j^{A_n}(\mathrm{Veronese}(n, 2, -n-r), \mathbb{C})$$

where $i + j = \binom{n}{2}$.

Remark We note that since $M = \mathrm{Segre}(m, n, r)$, $\mathrm{Veronese}(n, d, r)$ are torsion free modules over the subalgebras $\mathrm{Segre}(m, n, 0)$, $\mathrm{Veronese}(n, d, 0)$ respectively, in both cases the quotient $A/\mathrm{Ann}_A(M)$ is isomorphic to the corresponding subalgebra. Since we can compute the Krull dimensions of these subalgebras from the known dimensions of the Segre and Veronese varieties, we conclude from Cohen-Macaulayness that

$$\begin{aligned} \mathrm{hd}_{A_{m,n}}(\mathrm{Segre}(m, n, r)) &= mn - (m + n - 1) = (m-1)(n-1) \\ \mathrm{hd}_{A_n}(\mathrm{Veronese}(n, 2, r)) &= \binom{n+1}{2} - n = \binom{n}{2}. \end{aligned}$$

Therefore in the dual pairing we should expect $\mathrm{Tor}_i, \mathrm{Tor}_j$ to pair when $i + j = h$, with exactly the values of h as stated in the Proposition.

Proof of Proposition 2.4: Figure 3(a) and (c) depict the relevant shapes (λ, μ) and λ along with their complementary partners within the appropriately sized boxes. As shown, the complementary shapes also fit the format of figures 1 and 2, with their parameters related to the original parameters as follows. For (λ, μ) with parameters r, s the complements (λ', μ') have parameters $r' = n - m - r, s' = n - 1 - s$, as shown in figure 3(a). For self-conjugate λ with Durfee square of size s, the complement λ' has Durfee square of size $n-s$, as shown in figure 3(c). To see that the homological degrees i, j of the original shapes and their complements, respectively, add up to the appropriate homological dimension h, one has two alternatives. One can either do a direct calculation in the two cases, or one can note that in both cases, $i + j$ is the same as the total number of shaded squares depicted in figure 3(b) or (d), and count that the number of shaded squares is the appropriate value $(m - 1)(n - 1)$ or $\binom{n}{2}$. □

The pairing of shapes inside rectangular boxes as in the previous proposition really *is* a pairing of dual vector spaces, and in fact a pairing of *contragredient* representations, due to the following well-known result.

Proposition 2.5 [21, §0.2(c)] *Let λ be a partition with at most n parts and all parts of size at most m. Let B be a rectangular box with n rows and m columns, and let λ' be the complement of λ within the box B, after rotating* 180 *degrees. Then as $GL_n(\mathbb{C})$ representations we have*

$$V^{\lambda'} \cong (V^{\lambda})^* \otimes (\det)^{\otimes m}$$

where $(V^{\lambda})^*$ denotes the contragredient representation to V^{λ}, and $\det \cong \wedge^m(V)$ *is the one-dimensional determinant representation of $GL(V)$.*

As a consequence of this proposition and from the dimensions of the rectangular boxes which occur in Proposition 2.4, we can see what shift in grading is necessary to turn some of the isomorphisms in Corollary 2.3 into graded isomorphisms:

$$\Omega(\mathrm{Segre}(m, n, r)) \cong \mathrm{Segre}(m, n, n - m - r)[(x_1 \cdots x_m)^{n-1}(y_1 \cdots y_n)^{m-1}]$$
$$\Omega(\mathrm{Veronese}(n, 2, r)) \cong \mathrm{Veronese}(n, 2, -n - r)[(x_1 \ldots x_n)^n]$$

where $M[\mathbf{x}^{\alpha}]$ indicates the module M with multidegrees shifted up by α. If $r = 0$, we can verify that these conjectural shifts in grading are actually correct: First assume without loss of generality that $m \leq n$, and compute the representations

$$\mathrm{Tor}^{A_{m,n}}_{(m-1)(n-1)}(\mathrm{Segre}(m, n, 0), k) = V^{((n-1)^{m-1}, m-1)} \otimes W^{((m-1)^n)}$$
$$\mathrm{Tor}^{A_n}_{\binom{n}{2}}(\mathrm{Veronese}(n, 2, 0), k) = \begin{cases} V^{(n^n)} & \text{if } n \text{ is even} \\ V^{(n^{n-1}, n-1)} & \text{if } n \text{ is odd} \end{cases}$$

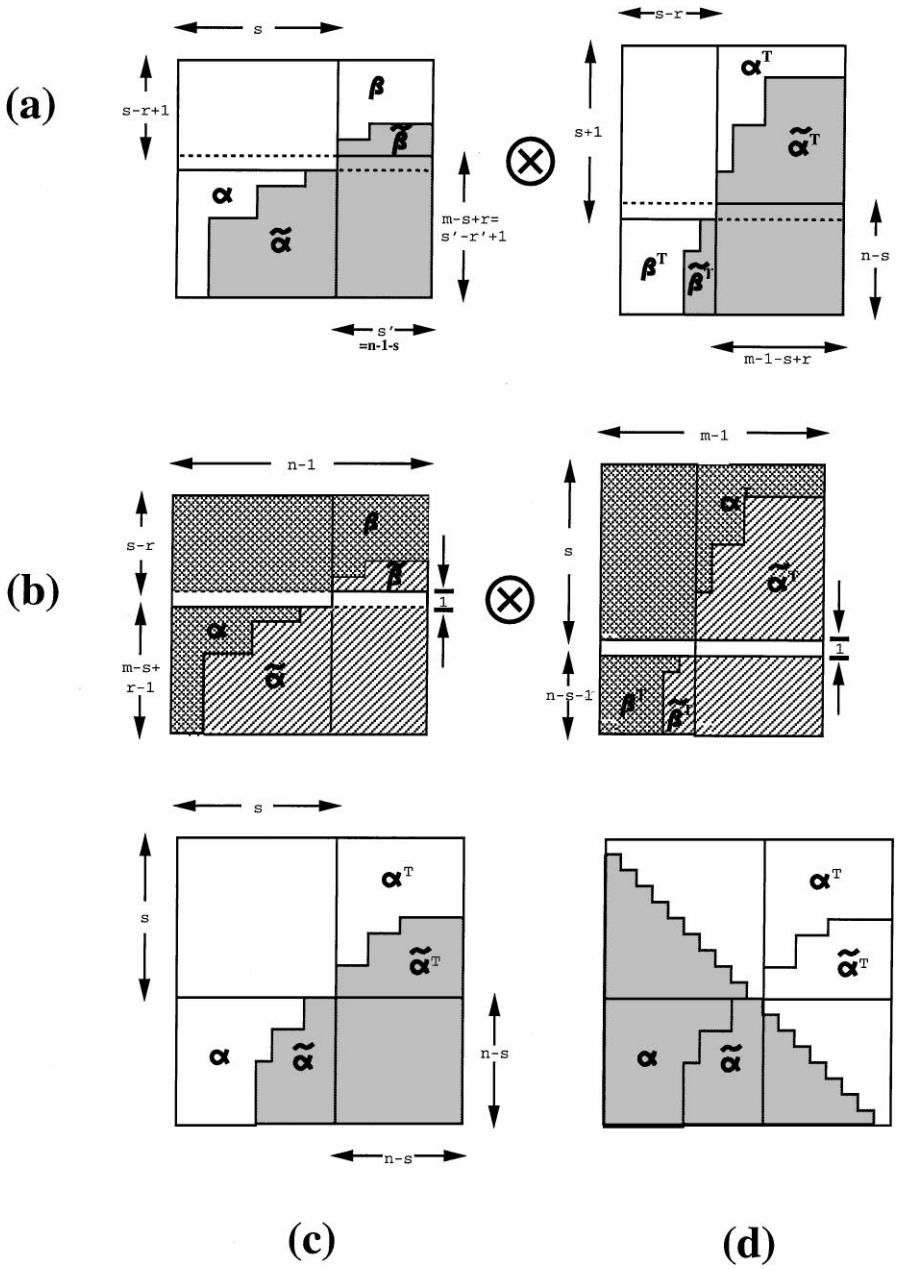

Figure 3. The pairing of partitions which are complementary within rectangular boxes: (a) The pairing for Segre(m, n, r). (b) Illustration for Segre(m, n, r) of why $i + j =$ (shaded area) $= (m-1)(n-1)$. (c) The pairing for Veronese$(n, 2, r)$. (d) Illustration for Veronese$(n, 2, r)$ of why $i + j =$ (shaded area) $= \binom{n}{2}$.

known from the results of [17, 19]. Then compare these with the easily computable representations (recalling $m \leq n$)

$$\mathrm{Tor}_0^{A_{m,n}}(\mathrm{Segre}(m, n, n-m), k) = V^{(n-m)} \otimes W^{\emptyset}$$
$$\mathrm{Tor}_0^{A_n}(\mathrm{Veronese}(n, 2, -n), k) = \begin{cases} V^{\emptyset} & \text{if } n \text{ is even} \\ V^{(1)} & \text{if } n \text{ is odd} \end{cases}$$

with which they are supposed to be paired. As a consequence, we immediately deduce from Proposition 2.1, Proposition 2.3, and Proposition 2.4 the following:

Corollary 2.6 *Theorem* 1.1 *is correct when* $r = 0$ *and when* $n - m - r = 0$. *Theorem* 1.2 *is correct when* $r \equiv 0 \bmod 2$ *and when* $-n - r \equiv 0 \bmod 2$.

Finally, from this we can deduce Theorems 1.1, 1.2:

Proof of Theorems 1.1 and 1.2: Since Theorems 1.1 and 1.2 both assert that groups $\mathrm{Tor}_\bullet^A(M, \mathbb{C})$ have certain decompositions as $GL(V)$- or $GL(V) \times GL(W)$-representations, we first claim they are *polynomial* representations, and hence it suffices to check that they have the correct *characters*, i.e. that the dimensions of weight-spaces $\mathrm{Tor}_i^A(M, \mathbb{C})_\gamma$ are correct for each weight γ. To see this claim, we use the fact that

$$\mathrm{Tor}_\bullet^A(M, \mathbb{C}) \cong \mathrm{Tor}_\bullet^A(\mathbb{C}, M),$$

and we can compute the latter by tensoring the Koszul resolution of $\mathbb{C}$ as an A-module with M and taking homology of the resulting complex. The terms in the Koszul resolution are exterior powers of $\mathbb{C}$-vector spaces tensored with A, and hence are polynomial representations. Since M is always a polynomial representation, tensoring with it preserves polynomiality. Then the homology groups of the resulting tensored complex are quotients of submodules of these polynomial representations, and hence also polynomial.

It remains to show that the weight spaces $\mathrm{Tor}_i^A(M, \mathbb{C})_\gamma$ always have the correct dimension asserted in Theorems 1.1 and 1.2. We start with Theorem 1.2, so that

$$A = A_n$$
$$M = \mathrm{Veronese}(n, 2, r)$$

and the group acting is $GL(V)$. If n, r are not already in the cases covered by Corollary 2.6, then n is even and r is odd. But then $n + 1$ is odd, so we know that Theorem 1.2 is correct for $\mathrm{Veronese}(n + 1, 2, r)$. Therefore each weight space $\mathrm{Tor}_i^{A_n}(\mathrm{Veronese}(n + 1, 2, r), \mathbb{C})_{\tilde{\gamma}}$ for $\tilde{\gamma} \in \mathbb{N}^{n+1}$ has the correct dimension predicted by Theorem 1.2. Given a weight $\gamma \in \mathbb{N}^n$, we can append an extra coordinate at the end equal to zero to obtain a weight $\tilde{\gamma} \in \mathbb{N}^{n+1}$. Proposition 3.2 shows that

$$\begin{aligned} \mathrm{Tor}_i^{A_n}(\mathrm{Veronese}(n, 2, r), \mathbb{C})_\gamma &\cong \tilde{H}_{i-1}(\Delta_\gamma; \mathbb{C}) \\ &\cong \tilde{H}_{i-1}(\Delta_{\tilde{\gamma}}; \mathbb{C}) \\ &\cong \mathrm{Tor}_i^{A_{n+1}}(\mathrm{Veronese}(n + 1, 2, r), \mathbb{C})_{\tilde{\gamma}}. \end{aligned}$$

Here Δ_γ and $\Delta_{\tilde{\gamma}}$ are as defined in Section 3, and the second isomorphism comes from the crucial (but trivial) fact that Δ_γ and $\Delta_{\tilde{\gamma}}$ are isomorphic simplicial complexes. Theorem 1.2 for Veronese$(n, 2, r)$ then follows from the well-known fact that the dimension of the weight-space V^λ_γ in the irreducible $GL_n(\mathbb{C})$-representation V^λ is the same as for the weight space $V^\lambda_{\tilde{\gamma}}$ in the irreducible $GL_{n+1}(\mathbb{C})$-representation V^λ.

A similar argument works for Segre(m, n, r). If m, n, r are not already in the cases covered by Corollary 2.6, then we can always choose $m' \geq m$ and $n' \geq n$ such that $n' - m' - r = 0$ and either $0 \leq r \leq n' - 1$ or $0 \leq -r \leq m' - 1$. Then Theorem 1.1 is correct for Segre(m', n', r), so the dimensions of each weight space $\mathrm{Tor}_i^{A_{m,n}}(\mathrm{Segre}(m', n', r), \mathbb{C})_{(\gamma,\delta)}$ are as predicted by Theorem 1.1. A similar argument using Proposition 3.2 then finishes the proof. □

3. Rational homology

The goal of this section is to sketch the proof of an old observation on Betti numbers of semigroup modules over semigroup rings, and then apply this to deduce Theorem 1.3 and other consequences.

To this end, we introduce some terminology. Let Λ be a finitely generated additive subsemigroup of $\mathbb{N}^d$, and let $\mathcal{M} \subseteq \mathbb{N}^d$ be a finitely-generated Λ-module, i.e. $\lambda + \mu \in \mathcal{M}$ for all $\lambda \in \Lambda$ and $\mu \in \mathcal{M}$. The semigroup ring $k[\Lambda]$ may be identified with a subalgebra of $k[z_1, \ldots, z_d]$ generated by some minimal generating set of monomials $m_1, \ldots, m_n$. Then $\mathcal{M}$ gives rise to a finitely generated module $M = k\mathcal{M}$ over $k[\Lambda]$ inside $k[\mathbf{z}]$, simply by taking the k-span of all monomials of the form $\mathbf{z}^\mu$ where $\mu \in \mathcal{M}$. Surjecting $A = k[x_1, \ldots, x_n]$ onto $k[\Lambda]$ by $x_i \mapsto m_i$, we endow $k[\Lambda]$ and M with the structure of finitely generated A-modules. Furthermore, all the rings and modules just defined carry an $\mathbb{N}^d$-grading, and hence so does $\mathrm{Tor}^A_\bullet(M, k)$. We will refer to the αth-graded piece of $\mathrm{Tor}^A_i(M, k)$ by $\mathrm{Tor}^A_i(M, k)_\alpha$ for $\alpha \in \mathbb{N}^d$.

Given $\mu \in \mathcal{M}$, define a simplicial complex K_μ on vertex set $[n] := \{1, 2, \ldots, n\}$ as follows:

$$K_\mu := \left\{ F \subseteq [n] : \frac{\mathbf{z}^\mu}{\prod_{i \in F} m_i} \in M \right\}.$$

Proposition 3.1 (cf. [7, Proposition 1.1], [24, Theorem 7.9], [8], [25, Theorem 12.12]) *For Λ, $\mathcal{M}$, A, M and $\mu \in \mathcal{M}$ as above, we have*

$$\mathrm{Tor}^A_i(M, k)_\mu \cong \tilde{H}_{i-1}(K_\mu; k)$$

where $\tilde{H}$ denotes reduced (simplicial) homology, and all other graded pieces $\mathrm{Tor}^A_i(M, k)_\alpha$ for $\alpha \notin \mathcal{M}$ vanish.

Proof: For completeness, we sketch the proof as in [7, Proposition 1.1].

First note that $\mathrm{Tor}^A_i(M, k)_\mu \cong \mathrm{Tor}^A_i(k, M)_\mu$. We can compute the right-hand side starting with the well-known Koszul complex $\mathcal{K}$ resolving k as an A-module. This complex has as

its tth term $\mathcal{K}_t$ the module $\wedge^t A^n$ which is the free A-module with A-basis

$$\left\{e_{i_1} \wedge \cdots \wedge e_{i_t}\right\}_{1 \le i_1 < \cdots < i_t \le n}$$

and where e_i carries the same $\mathbb{N}^d$-grading as the monomial generator m_i of $k[\Lambda]$. Tensoring the resolution $\mathcal{K}$ with the A-module M gives a complex $\mathcal{K} \otimes M$. Fix $\mu \in \mathbb{N}^d$ and restrict attention to the μth-graded piece $(\mathcal{K} \otimes M)_\mu$, which is a complex of k-vector spaces. The tth term $(\mathcal{K} \otimes M)_{t,\mu}$ in this complex has typical k-basis element of the form

$$\mathbf{z}^\gamma e_{i_1} \wedge \cdots \wedge e_{i_t}$$

where $\mathbf{z}^\gamma \in M$, and

$$\mathbf{z}^\gamma \cdot m_{i_1} \cdots m_{i_t} = \mathbf{z}^\mu. \tag{3.1}$$

Equation (3.1) implies that $(\mathcal{K} \otimes M)_\mu$ vanishes unless $\mu \in \mathcal{M}$. Furthermore, when $\mu \in \mathcal{M}$, note that in the above basis vector, γ is uniquely determined by μ and $\{i_1, \ldots, i_t\}$ from Equation (3.1). If we identify the above basis vector with the oriented simplex $[i_1, \ldots, i_t]$ in K_μ, one can check that $(\mathcal{K} \otimes M)_\mu$ is identified with the (augmented) simplicial chain complex $\tilde{C}_\bullet(K_\mu; k)$ up to a shift in grading by 1. The proposition then follows. □

To apply this result along with Theorems 1.1 and 1.2, we note that Segre$(m, n, 0)$ is the semigroup ring for the submonoid of $\mathbb{N}^m \times \mathbb{N}^n$ generated by $\{(e_i, e_j)\}_{1 \le i \le m, 1 \le j \le n}$ where e_i is the ith standard basis vector, and Segre(m, n, r) is the semigroup module generated over this semigroup by $\{(v, 0)\}$ as v runs over all vectors in $\mathbb{N}^m$ with $\sum_i v_i = r$ if $r > 0$ (and similarly $\{(0, w)\}$ if $r < 0$). For any multidegree (γ, δ) occurring in Segre(m, n, r), the complex $K_{(\gamma,\delta)}$ from Proposition 3.1 is isomorphic to the *chessboard complex with multiplicities* $\Delta_{\gamma,\delta}$ defined in [7, Remark 3.5]: $\Delta_{\gamma,\delta}$ is the simplicial complex whose vertex set is the set of squares on an $m \times n$ chessboard, and whose simplices are the sets F of squares having no more than γ_i squares from row i and no more than δ_j squares from row j for all i, j. The isomorphism $K_{(\gamma,\delta)} \cong \Delta_{\gamma,\delta}$ comes from identifying the generator (e_i, e_j) of the semigroup with the square in row i and column j of the chessboard. Note that in the square-free multidegree $(\gamma, \delta) = ((1, \ldots, 1), (1, \ldots, 1))$, this complex $\Delta_{\gamma,\delta} = \Delta_{m,n}$ is the $m \times n$ *chessboard complex* considered in [5], whose vertices are the squares of the chessboard, and whose simplices are the sets of squares which correspond to a placement of rooks on the board so that no two rooks lie in the same row or column. The complex $\Delta_{3,3}$ is depicted in figure 4(a).

Similarly, Veronese$(n, 2, 0)$ is the semigroup ring for the submonoid of $\mathbb{N}^n$ generated by $\{(e_i + e_j)\}_{1 \le i \le j \le n}$, and Veronese$(n, 2, 1)$ is the semigroup module over this semigroup generated by $\{e_i\}_{1 \le i \le n}$. For any multidegree γ which occurs in Veronese$(n, 2, r)$, the complex K_γ from Proposition 3.1 may be identified with what we will call a *bounded-degree graph complex* Δ_γ. In the square-free multidegree $\gamma = (1, \ldots, 1)$, this complex Δ_γ is the *matching complex* Δ_n for a complete graph on n vertices, as considered in [5]. The matching complex for a graph G is the simplicial complex whose vertex set is the set of edges of G, and whose simplices are the subsets of edges which form a *partial matching*, i.e. an edge-subgraph in which every vertex lies on at most one edge. The isomorphism

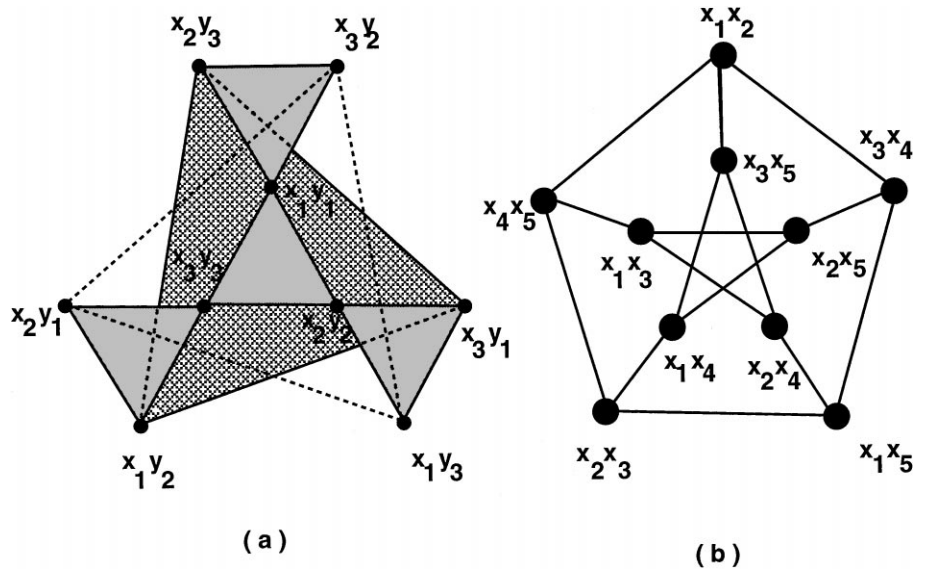

Figure 4. (a) The chessboard complex $\Delta_{3,3} = \Delta_{(1,1,1),(1,1,1)}$. The vertices are labelled by the generators $x_i y_j$ of Segre$(3, 3, 0)$. The triangular face with vertices x_2y_1, x_3y_2, x_1y_3 is shown transparent so as not to obscure the faces underneath. (b) The matching complex $\Delta_5 = \Delta_{(1,1,1,1,1)}$ with vertices labelled by some of the generators $x_i x_j$ of Veronese$(5, 2, 0)$. Note that the generators x_i^2 do not appear as vertices, since they do not divide into $\mathbf{x}^{(1,1,1,1,1)} = x_1x_2x_3x_4x_5$.

$\Delta_{(1,\ldots,1)} \cong \Delta_n$ comes from the fact that $\Delta_{(1,\ldots,1)}$ cannot use any vertices corresponding to the generators $\{2e_i\}$ of the semigroup because of the square-free multidegree $(1, \ldots, 1)$, and the vertex corresponding to the generator $e_i + e_j$ may be identified with the edge between vertices i and j in the complete graph. The matching complex Δ_5 is depicted in figure 4(b). For more general γ which are not square-free, Δ_γ is the bounded-degree graph complex, whose vertices correspond to the possible loops and edges in a complete graph on n vertices, and whose faces are the subgraphs (with loops allowed) in which the degree of vertex i is bounded by γ_i. Here a loop on a vertex is counted as adding 2 to the degree of the vertex.

We record the preceding observations in the following Proposition:

Proposition 3.2 *For any field k there are isomorphisms*

$$\mathrm{Tor}_i^{A_{m,n}}(\mathrm{Segre}(m, n, r), k)_{(\gamma,\delta)} \cong \tilde{H}_{i-1}(\Delta_{\gamma,\delta}; k)$$
$$\mathrm{Tor}_i^{A_n}(\mathrm{Veronese}(n, 2, r), k)_\gamma \cong \tilde{H}_{i-1}(\Delta_\gamma; k).$$

We next consider symmetries which lead to group actions on these complexes. Notice that one can re-index the rows and columns of the chessboard (which corresponds to permuting the coordinates of (γ, δ) independently via an element of $\Sigma_m \times \Sigma_n$), without changing the chessboard complex $\Delta_{\gamma,\delta}$ up to isomorphism. Consequently, we may assume without loss

of generality that γ, δ are partitions, i.e. that their coordinates appear in weakly decreasing order. Therefore γ, δ are completely determined by the multiplicities of the parts which occur in them, so we can write $\gamma = 1^{a_1}2^{a_2}\cdots$ and $\delta = 1^{b_1}2^{b_2}\cdots$. With this notation, define the *Young* or *parabolic subgroup*

$$\Sigma_{\mathbf{a}} \times \Sigma_{\mathbf{b}} \hookrightarrow \Sigma_m \times \Sigma_n$$

where $\Sigma_{\mathbf{a}} = S_{a_1} \times S_{a_2} \times \cdots$ and similarly for $\Sigma_{\mathbf{b}}$. Then $\Sigma_{\mathbf{a}} \times \Sigma_{\mathbf{b}}$ acts as a group of simplicial automorphisms of $\Delta_{\gamma,\delta}$. Note that in the square-free case, it is the entire group $\Sigma_m \times \Sigma_n$ which acts on $\Delta_{m,n}$.

Similarly, one can re-index the vertices $[n]$ of the complete graph (which corresponds to permuting the coordinates of γ via an element of Σ_n), without changing the bounded degree graph complex Δ_γ up to isomorphism. Consequently, we may assume without loss of generality that γ is a partition, and completely determined by the multiplicities of the parts which occur, so we can write $\gamma = 1^{a_1}2^{a_2}\cdots$. There is then a Young subgroup $\Sigma_{\mathbf{a}} \hookrightarrow \Sigma_n$ acting as a group of simplicial automorphisms of Δ_γ, and in the square-free case it is the entire symmetric group Σ_n which acts on Δ_n.

In order to state our next result, we need to recall the notion of a *weight space* in a $GL_n(k)$-representation (see [12] for this and other facts from the representation theory of $GL_n(k)$). Let $\mathrm{diag}(\mathbf{x})$ denote the diagonal matrix in $GL_n(k)$ having eigenvalues $x_1, \ldots, x_n$. It is known that when k has characteristic zero, any finite-dimensional (rational) representation U of $GL_n(k)$ decomposes as a direct sum of k-vector spaces

$$U = \bigoplus_{\gamma \in \mathbb{N}^n} U_\gamma$$

where U_γ is the $\mathbf{x}^\gamma$-eigenspace for $\mathrm{diag}(\mathbf{x})$, and U_γ is usually called the *weight space* of U corresponding to the *weight* γ. It is well-known and easy to see that when we act on γ by an element of Σ_n by permuting coordinates we obtain a weight γ' whose weight space $U_{\gamma'}$ is isomorphic to U_γ. As a consequence, in studying weight spaces we may restrict attention to those with γ a partition (i.e. a *dominant weight*), so $\gamma = 1^{a_1}2^{a_2}\cdots$. As in the previous two paragraphs, the Young (parabolic) subgroup $\Sigma_{\mathbf{a}} \hookrightarrow \Sigma_n \hookrightarrow GL_n(k)$ acts on U and preserves U_γ, so that U_γ is a $\Sigma_{\mathbf{a}}$-representation.

Theorem 3.3

- *Let $(\gamma, \delta) \in \mathbb{N}^m \times \mathbb{N}^n$ be partitions, $r := |\gamma| - |\delta|$, $\Sigma_{\mathbf{a}} \times \Sigma_{\mathbf{b}}$ the group described above, and k a field of characteristic zero. Then as a $\Sigma_{\mathbf{a}} \times \Sigma_{\mathbf{b}}$-representation, the reduced homology $\tilde{H}_\bullet(\Delta_{\gamma,\delta}; k)$ of the chessboard complex with multiplicity $\Delta_{\gamma,\delta}$ is isomorphic to the direct sum of the (γ, δ)-weight spaces*

$$\bigoplus_{(\lambda,\mu)} (V^\lambda \otimes W^\mu)_{(\gamma,\delta)}$$

as (λ, μ) runs through the same indexing set as in Theorem 1.1, and where (λ, μ) occurs in $\tilde{H}_{s(s-r)+|\alpha|+|\beta|-1}(\Delta_{\gamma,\delta}; k)$.

- *Let $\gamma \in \mathbb{N}^n$ be a partition, $r := |\gamma| \bmod 2$, and $\Sigma_{\mathbf{a}}$ the permutation group as described above. Then as a $\Sigma_{\mathbf{a}}$-representation, the reduced homology $\tilde{H}_\bullet(\Delta_\gamma; k)$ of the complete graph matching complex Δ_γ is isomorphic to the direct sum of the γ-weight spaces*

$$\bigoplus_{\lambda} V_\gamma^\lambda$$

as λ runs through the same indexing set as in Theorem 1.2, and where λ occurs in $\tilde{H}_{\binom{s}{2}+|\alpha|-1}(\Delta_\gamma; k)$.

Proof: By Proposition 3.2 we have

$$\tilde{H}_{i-1}(\Delta_{\gamma,\delta}; k) \cong \mathrm{Tor}_i^{A_{m,n}}(\mathrm{Segre}(m, n, r), k)_{(\gamma,\delta)}$$

where $r := |\gamma| - |\delta|$. Since the grading by multidegrees $(\gamma, \delta) \in \mathbb{N}^m \times \mathbb{N}^n$ is easily seen to coincide with the decomposition of $\mathrm{Tor}_i^{A_{m,n}}(\mathrm{Segre}(m, n, r), k)$ into $GL_n(k) \times GL_m(k)$-weight spaces, the assertion for $\Delta_{\gamma,\delta}$ then follows from Theorem 1.1.

Similarly, by Proposition 3.2 we have

$$\tilde{H}_{i-1}(\Delta_\gamma; k) = \mathrm{Tor}_i^{A_n}(\mathrm{Veronese}(n, 2, r), k)_\gamma$$

where $r := |\gamma| \bmod 2$, and hence the assertion for Δ_γ follows from Theorem 1.2. □

Proof of Theorem 1.3: We simply recall the fact that the $(1, \ldots, 1)$ weight-space $V^\lambda_{(1,\ldots,1)}$ of the irreducible $GL_n(k)$-representation V^λ affords the irreducible Σ_n-representation $\mathcal{S}^\lambda$. This fact follows, for example, from a comparison of Weyl's construction of V^λ with the Specht construction of $\mathcal{S}^\lambda$ (see [12, Part I §§4 and 6]). □

Remark 3.4 The reader may be unsatisfied with our general description of the rational homologies $\tilde{H}_\bullet(\Delta_{\gamma,\delta}; k)$, $\tilde{H}_\bullet(\Delta_\gamma; k)$, since the answers are stated in terms of the mysterious $\Sigma_{\mathbf{a}}$-representations on the weight-spaces V_γ^λ of the irreducible $GL_n(k)$-representations V^λ. However, we would like to point out that from this description one can deduce their decompositions into irreducible $\Sigma_{\mathbf{a}}$-representations, once one knows the irreducible $\Sigma_{\mathbf{a}}$-decomposition of V_γ^λ. The latter decomposition can be reduced to computations of *Littlewood-Richardson coefficients* and some instances of the *plethysm problem*, as we now explain. The authors would like to thank Mark Shimozono and William Doran for explaining this reduction to us.

Let $\gamma = 1^{a_1} 2^{a_2} \ldots t^{a_t}$, and let $GL_{\mathbf{a}}$ be the subgroup

$$GL_{a_1} \times \cdots \times GL_{a_t} \hookrightarrow GL_n(k).$$

By restriction, $\mathrm{Res}^{GL_n}_{GL_{\mathbf{a}}} V^\lambda$ becomes a $GL_{\mathbf{a}}$-representation, and as such has a decomposition into $GL_{\mathbf{a}}$-irreducibles

$$\mathrm{Res}^{GL_n}_{GL_{\mathbf{a}}} V^\lambda \cong \bigoplus_{(\rho_1,\ldots,\rho_t)} (V^{\rho_1} \otimes \cdots \otimes V^{\rho_t})^{\oplus c^\lambda_{\rho_1,\ldots,\rho_t}}$$

where $c^{\lambda}_{\rho_1,\ldots,\rho_t}$ is a nonnegative integer which can be computed using the *Littlewood-Richardson rule* [12, p. 455]. In fact, $c^{\lambda}_{\rho_1,\ldots,\rho_t}$ has the following combinatorial interpretation: it is the number of *column-strict* (*semi-standard*) *tableaux* of shape λ and content $(\rho_1, \ldots, \rho_t)$ which are *Yamanouchi* with respect to each of the alphabets $1, 2, \ldots, a_1$ and $a_1 + 1, \ldots, a_1 + a_2$ and $a_1 + a_2 + 1, \ldots, a_1 + a_2 + a_3$, etc. We refer the reader to [12] for the definition of column-strict tableaux and contents. A tableaux is said to be Yamanouchi with respect to an alphabet $a, a + 1, \ldots, b - 1, b$ if when one restricts attention to the entries of the tableaux that lie in this alphabet, and read these entries from right to left in a row, proceeding from the top row and moving down, one obtains a word that has more occurrences of the letter i than the letter $i + 1$ in any initial segment, for all i.

Now using the inclusions

$$\Sigma_{\mathbf{a}} \hookrightarrow GL_{\mathbf{a}} \hookrightarrow GL_n(k)$$

it is easy to see that we have the following isomorphism of $\Sigma_{\mathbf{a}}$-representations:

$$V^{\lambda}_{\gamma} \cong \bigoplus_{(\rho_1,\ldots,\rho_t)} \left(V^{\rho_1}_{1^{a_1}} \otimes V^{\rho_2}_{2^{a_2}} \cdots \otimes V^{\rho_t}_{t^{a_t}}\right)^{\oplus c^{\lambda}_{\rho_1,\ldots,\rho_t}}$$

where Σ_{a_i} acts on $V^{\rho_i}_{i^{a_i}}$ for each i.

Consequently, we have reduced the original description to the following problem: given a, b nonnegative integers, and ρ a partition with $|\rho| = ab$, how do we decompose the Σ_a-representation $V^{\rho}_{b^a}$ into Σ_a irreducibles $\mathcal{S}^{\nu}$ with $|\nu| = a$? By a result of Gay [13], this is an instance of the *plethysm problem* [12, Part I §6]: the multiplicity of $\mathcal{S}^{\nu}$ as a Σ_a-representation in $V^{\rho}_{b^a}$ is the same as the multiplicity of V^{ρ} in $S_{\nu}(\mathrm{Sym}^b V)$ where S_{ν} is the *Schur functor* [2] corresponding to ν. Alternatively, the above multiplicity is the same as the coefficient of the *Schur function* s_{ρ} in the *plethysmic composition* $s_{\nu}[s_{(b)}]$. Algorithms for computing these multiplicities are contained in [9].

4. Remarks and open problems

Most of the results in this paper have been limited to the case where k has characteristic zero, since some of the methods involved break down in positive characteristic. The question of how $\mathrm{Tor}^A(\cdot, k)$ varies with the characteristic of k for the Segre and quadratic Veronese modules, and consequently what torsion can occur in the homology of the chessboard and matching complexes $\Delta_{m,n}$, Δ_n is wide open, and of great interest. For this reason, we review some of what little is known here.

Hashimoto [14] was the first to show that $\mathrm{Tor}_3^{A_{5,5}}(\mathrm{Segre}(5, 5, 0), k)$ depends upon whether k has characteristic 3, and consequently that $\Delta_{5,5}$ has 3-torsion in its 2-homology (see also [5, Proposition 2.3] which contains an error that was later corrected). Anderson [3] showed that $\mathrm{Tor}_5^{A_7}(\mathrm{Veronese}(7, 2, 0), k)$ depends upon whether k has characteristic 5, by an explicit calculation of $\tilde{H}_4(\Delta_{\gamma}, \mathbb{Z})$ for the multidegree $\gamma = (2, 2, 2, 2, 2, 2, 2)$. Bouc [6] showed that $\tilde{H}_1(\Delta_7)$ has 3-torsion (see also Table 3 of [4]), and hence $\mathrm{Tor}_2^{A_7}(\mathrm{Veronese}(7, 2, 1), k)_{\gamma}$ for $\gamma = (1, 1, \ldots, 1)$ will depend upon whether the characteristic of k is 3. More specificially,

Bouc shows that $\tilde{H}_k(\Delta_{3k+4};\mathbb{Z}) = \mathbb{Z}/3\mathbb{Z}$ for $k \geq 1$, and also for $k \geq 3$ that $\tilde{H}_k(\Delta_{3k+3};\mathbb{Z})$ is a finite 9-torsion group requiring at least $3k+2$ generators.

On the other hand, the resolutions of determinantal ideals generated by $t \times t$ minors of an $m \times n$ matrix are known to be characteristic-free when $t = m, m-1, m-2$ by results of Eagon and Northcott [10], Akin, Buchsbaum, and Weyman [1], and Hashimoto [15], respectively. This implies (using the 2×2 minor case) that $\mathrm{Segre}(m, n, 0)$ has a characteristic free resolution whenever $m \leq 4$. This suggests the following problems:

Problem 4.1. Does $\mathrm{Segre}(m, n, r)$ *have a characteristic-free resolution for* $m \leq 4$? *Does* $\mathrm{Veronese}(n, 2, r)$ *have a characteristic-free resolution for* $n \leq 6$? *Equivalently do the complexes* $\Delta_{\gamma,\delta}$ *have torsion-free integral homology whenever* γ *has at most* 4 *parts, and similarly for* Δ_γ *when* γ *has at most* 6 *parts*?

One might be tempted to approach Problem 4.1 by showing that the complexes $\Delta_{\gamma,\delta}$ and Δ_γ are homotopy equivalent to wedges of spheres in the above situations. This was indeed verified by Xun Dong (personal communication) for $\Delta_{\gamma,\delta}$ when γ has at most 2 parts. However Dong points out that it is not true already for the 3×4 chessboard complex $\Delta_{(1,1,1),(1,1,1,1)}$, since it was observed in [5] that this complex triangulates a 2-dimensional torus.

Another question deals with vanishing theorems and the connectivity of the associated simplicial complexes. In [5], it is proven that $\Delta_{m,n}$ is topologically $(\nu-2)$-connected, where

$$\nu = \min\left\{m, n, \left\lfloor \frac{1}{3}(m+n+1) \right\rfloor\right\}$$

and it is conjectured that this bound is tight, i.e. that $\Delta_{m,n}$ has some nontrivial $(\nu-1)$-homology. It is also proven there that Δ_n is $\left(\left\lfloor \frac{n+1}{3} \right\rfloor - 2\right)$-connected.

Problem 4.2. Generalize these connectivity results to arbitrary chessboard complexes with multiplicity $\Delta_{\gamma,\delta}$ *and the multi-matching complexes* Δ_γ.

Such results would give constraints on the resolutions of $\mathrm{Segre}(m, n, r)$ and $\mathrm{Veronese}(n, 2, r)$ which are independent of the field characteristic.

Remark 4.3 It turns out that the modules $\mathrm{Segre}(m, n, r)$ belong to a larger family of modules $M_{t,\lambda}$ supported in determinantal varieties for $t \times t$ minors with $t \geq 2$, which we briefly describe below. These modules were considered in a recent preprint of Weyman [26]. We thank Mark Shimozono and an anonymous referee for pointing out that the methods of Lascoux [19] and Pragacz and Weyman [20] can be used to describe $\mathrm{Tor}_\bullet^A(M_{t,\lambda}, \mathbb{Q})$, thus generalizing Theorem 1.1.

Let $A := A_{m,n} = \mathrm{Sym}(V \otimes W)$ as above. Let I_t be the ideal in A generated by the $t \times t$-minors of the $m \times n$ matrix (z_{ij}). Let $Y_t := \mathrm{Spec}(A/I_t)$ be the *determinantal variety*, and let $X := \mathrm{Spec}(A)$, an affine space which we identify with $V^* \otimes W^* = \mathrm{Hom}(V, W^*)$. Let G be the Grassmannian of $(t-1)$-dimensional quotients of V. We have the tautological

exact sequence of vector bundles on G

$$0 \to \mathcal{R} \to \mathcal{V}_G \to \mathcal{Q} \to 0$$

where $\mathcal{V}_G := \mathcal{O}_G \otimes V$. Similarly define $\mathcal{W}_G := \mathcal{O}_G \otimes W$. Inside of $X \times G = \mathrm{Hom}(V, W^*) \times G$ there is a subbundle

$$Z := \mathrm{Hom}(\mathcal{Q}, \mathcal{W}_G^*) = \{(\varphi, U) : \varphi \text{ induces a map } U \to W^*\}.$$

Let $\rho : Z \to G$ be induced by the projection onto the second factor in $X \times G$. For any partition $\lambda := (\lambda_1, \ldots, \lambda_{t-1})$ with at most $(t-1)$-parts, let $L_\lambda \mathcal{Q}$ be the vector bundle on G obtained by applying the *Schur functor* [2] associated with λ to $\mathcal{Q}$. Then $M_{t,\lambda} := H^0(Z, \rho^*(L_\lambda \mathcal{Q}))$ is an A-module supported on Y_t. If $t = 2$ and λ has a single part $\lambda_1 = r$, then $M_{t,\lambda} = \mathrm{Segre}(m, n, r)$.

Presumably, although we have not checked this, similar constructions and resolutions exist generalizing Theorem 1.2.

Acknowledgments

The authors would like to thank Mark Shimozono and William Doran for the content of Remark 3.4, and Naoki Terai for the references [24, Theorem 7.9] and [15]. They also thank Mark Shimozono and an anonymous referee for pointing out the content of Remark 2.7.

References

1. K. Akin, D.A. Buchsbaum, and J. Weyman, "Resolutions of determinantal ideals: The submaximal case," *Adv. Math.* **39** (1981), 1–30.
2. K. Akin, D.A. Buchsbaum, and J. Weyman, "Schur functors and Schur complexes," *Adv. Math.* **44** (1982), 207–278.
3. J. Anderson, "Determinantal rings associated with symmetric matrices: A counterexample," Ph.D. Thesis, Univ. of Minnesota, 1992.
4. E. Babson, A. Björner, S. Linusson, J. Shareshian, V. Welker, "Complexes of not i-connected graphs," MSRI preprint #1997=054, 1996.
5. A. Björner, L. Lovasz, S. Vrećica, and R. Živaljević, "Chessboard complexes and matching complexes," *J. Lond. Math. Soc.* **49** (1994), 25–39.
6. S. Bouc, "Homologie de certains ensembles de 2-sous-groups des groupes symétriques," *J. Algebra* **150** (1992), 158–186.
7. W. Bruns and J. Herzog, "Semigroup rings and simplicial complexes," Preprint 171 (Osnabrücker Math. Schriften), Universität Osnabrück, 1995.
8. A. Campillo and C. Marijuan, "Higher order relations for a numerical semigroup," *Séminaire de Théorie des Nombres* **3** (1991), 249–260.
9. Y.M. Chen, A.M. Garsia, J. Remmel, in *Combinatorics and Algebra*, Boulder, Colo. 1983, *Algorithms for plethysm*, Amer. Math. Soc., Providence, 1984, pp. 109–153.
10. J. Eagon and D. Northcott, "Generically acyclic complexes and generically perfect ideals," *Prod. Roy. Soc. Ser. A* **299** (1967), 147–172.
11. J. Friedman and P. Hanlon, "On the Betti numbers of chessboard complexes," preprint (1996).
12. W. Fulton and J. Harris, "Representation theory: A first course," Graduate Texts in Mathematics: Readings in Mathematics, vol. 129, 1991.

13. D. Gay, "Characters of the weyl group of SU(n) on zero weight spaces and centralizers of permutation representations," *Rocky Moun. J. Math.* **6** (1976), 449–455.
14. M. Hashimoto, "Determinantal ideals without minimal free resolutions," *Nagoya J. Math.* **118** (1990), 203–216.
15. M. Hashimoto, "Resolutions of determinantal ideals: t-minors of $(t-2) \times n$ matrices," *J. Algebra* **142** (1991), 456–491.
16. M. Hochster and J.A. Eagon, "Cohen-Macaulay rings, invariant theory, and the generic perfection of determinantal loci," *Amer. J. Math.* **93** (1971), 1020–1058.
17. T. Józefiak, P. Pragacz, and J. Weyman, "Resolutions of determinantal varieties and tensor complexes associated with symmetric and antisymmetric matrices," *Asterisque* **87-88** (1981), 109–189.
18. D. Karagueusian, "Homology of complexes of degree one graphs," Ph.D. Thesis, Stanford Univ., 1994.
19. A. Lascoux, "Syzygies des variétés determinantales," *Adv. Math.* **30** (1978), 202–237.
20. P. Pragacz and J. Weyman, "Resolutions of determinantal varieties: A survey," Lecture Notes in Mathematics Vol. 1220, pp. 73–92.
21. P. Pragacz and J. Weyman, "Complexes associated with trace and evaluation. Another approach to Lascoux' resolution," *Adv. Math.* **57** (1985), 163–207.
22. R.P. Stanley, "Invariants of finite groups and their applications to combinatorics," *Bull. Amer. Math. Soc.* **1** (1979), 475–511.
23. R.P. Stanley, "Linear Diophantine Equations and Local Cohomology," *Inven. Math.* **68** (1982), 175–193.
24. R.P. Stanley, *Combinatorics and Commutative Algebra*, 2nd edition, Progress in Mathematics Vol. 41, Birkhäuser, Boston, 1996.
25. B. Sturmfels, *Gröbner Bases and Convex Polytopes*, University Lecture Series., Vol. 8, American Mathematical Society, Providence, 1996.
26. J. Weyman, "The Grothendieck group of $GL(F) \times GL(G)$-equivariant modules over the coordinate ring of determinantal varieties," preprint, 1997.